PRODUCT OVERVIEW

SERVOTOUGH FluegasExact 2700

HAZARDOUS AREA

GAS	MEASURES	APPLICATION
OXYGEN	PERCENT	PROCESS CONTROL
COMBUSTIBLES	TRACE PPM	COMBUSTION

SENSING TECHNOLOGY

CALORIMETRY

ZIRCONIA

KEY APPLICATIONS

- Process heaters
- Utility boilers
- Thermal crackers
- Crematoria
- Iron & steel
- Incinerators
- Biomass boilers

ADVANCED FLUE GAS ANALYZER FOR HIGH-TEMPERATURE MEASUREMENT OF O_2 AND COMBUSTIBLES

UNRIVALLED PERFORMANCE

- Uses industry-leading patented technologies (Zirconia cell and Thick Film Catalytic sensor) for ultra-accurate and reliable measurements
- Manufactured by Servomex - over 60 years' experience in pioneering gas analysis, with a global install base

FLEXIBLE

- Designed for Safe Area, Zone 2/Division 2 and ATEX Cat. 3 hazardous area rated locations
- Robust O_2 and COe analysis meets diverse application needs
- Configurable sampling options for exact fit

EASY TO USE

- Optional Flowcube technology provides continuous flow monitoring for preventative maintenance
- Easy to maintain in the field

LOW COST OF OWNERSHIP

- Simple installation and low maintenance requirements
- Extractive sampling design protects from harsh process conditions, extending product life
- Long life, low-drift sensing technologies for reliability and extended calibration intervals
- Engineered design that extends maintenance intervals and permits field service

BENCHMARK COMPLIANCE

- ATEX Cat. 3, IECEx Zone 2 & North America Class I, Div. 2

For more information please contact us

Visit servomex.com/contact

PRODUCT OVERVIEW

SERVOTOUGH FluegasExact 2700

HAZARDOUS AREA

UNBEATABLE PERFORMANCE IN THE MOST CHALLENGING LOCATIONS

When you work in combustion analysis applications where high temperatures and particulates/dusts are occupational hazards, you need a gas analysis solution that offers rugged durability and unrivalled performance. Using a robust, fully heated stainless steel design, the FluegasExact is certified for Zone 2/Division 2 monitoring. High temperature and flow sensor options further extend operational performance.

A NO COMPROMISE SOLUTION

At the heart of the SERVOTOUGH FluegasExact's exceptional performance are Servomex's patented Zirconium Oxide cell for oxygen measurement and a Thick Film catalytic sensor for measuring carbon monoxide and COe (combustibles). Combined, the performance of both technologies improves process control and helps reduce excess oxygen, reducing NOx, SO_3 and CO emissions and has been proven to save up to four percent of fuel costs per year.

Both sensors are installed within Servomex's custom-designed heated sensor head, which has a low-flow extractive design that can attach directly to the flue or can be remote mounted. Manufactured to the highest quality standards, this ensures exceptional performance in the toughest environments and with the minimum of maintenance.

UNBEATABLE VALUE OVER PRODUCT LIFE

The ability to reduce ongoing maintenance costs and minimize long-term ownership costs is essential, while operational benefits like simple installation requirements are highly attractive. Supported by Servomex's global service network, which offers a complete package of support from commissioning to servicing, the FluegasExact delivers a long life of exceptional performance.

USEFUL LINKS

SERVOMEX SERVICE NETWORK
servomex.com/service

SERVOMEX SYSTEMS INTEGRATED SOLUTIONS
servomex.com/systems

SERVOMEX EXPERT UNRIVALLED KNOWLEDGE AND VISION
servomex.com/expert-guidance

PBTDSFluegasExact Rev.0 Date: 08/20

These analyzers are not intended for any form of use on humans and are not medical devices as described in the Medical Devices Directive 93/42EEC.

Please note: *Whilst every effort has been made to ensure accuracy, no responsibility can be accepted for errors and omissions. Data may change, as well as legislation, and you are strongly advised to obtain copies of the most recently issued regulations, standards and guidelines. This document is not intended to form the basis of a contract.*

Servomex has a policy of constant product improvement and reserves the right to change specifications without notice. © Servomex Group Limited. 2020. A Spectris company. All rights reserved.

SERVOMEX
a spectris company

SERVOMEX.COM

TECHNICAL DATA SHEET

SERVOTOUGH FluegasExact 2700

SPECIFICATIONS

GAS MEASURED	OXYGEN (O_2)	COMBUSTIBLES (COe - CARBON MONOXIDE EQUIVALENT)	
TECHNOLOGY‡	Zirconium oxide (Zirconia)	Patented thick film catalytic sensor	
		HIGH SENSITIVITY	SULFUR RESISTANT
Typical combustion applications	All combustion applications	Natural gas, light oil fuels Flue/sample gas SOx contents <500ppm	Sour gas, heavy oils, coal incinerator fuels Flue/sample gas SOx contents <2,500ppm
PERFORMANCE			
Working range	0-21% O_2	0-6,000ppm COe	
Intrinsic error (accuracy)	±1% of reading or ±0.1% O_2*	±25ppm or ±5% of reading*	±75ppm or ±5% of reading*
Measurement resolution	0.01% O_2	1ppm recommended	10ppm recommended
Drift (zero)	Per 3 months; <0.5% of range or 0.05% O_2	<25ppm/week	<35ppm/week
Repeatability	<0.1% O_2	±25ppm or 5% of reading*	±50ppm or 5% of reading*
Display range	0.01% to 25% O_2	0-10,000ppm	
Min. recommended range	0-1% O_2†	0-500ppm	
Recommended calibration frequency	12 months	1 month	
Cross sensitivity (under normal plant operating conditions)	No significant effect	Typical effect of common combustible flue gases per 1,000ppm	
		SO_2 <30ppm CH_4 <10ppm	<100ppm <50ppm

SYSTEM RESPONSE TIMES T_{90} (TYPICAL)				
MEASUREMENT	Sensor head (remote extraction systems)	<700°C, 1m long, stainless steel sample probe with sample filter	<1,000°C, 1m long, high temperature alloy sample probe with sample filter	<1,750°C, 1m long, ceramic sample probe with sample filter
O_2	<10s	<17s	<17s	<20s
COMBUSTIBLES COe	<20s	<27s	<27s	<30s

FLOWCUBE FLOW SENSOR	
Repeatability	±20 ml/min at 200 ml/min (nominal sample flow)
Response time (T_{90})	<20s
Alarms & relays	Two SPCO relays (250V ac/3A or 28V dc/1A max), flow status alarm, and flow alarm system fault

† Below 1% display shows low oxygen level warning
* Whichever is greater
‡ The FluegasExact 2700 is not suitable for use as a primary safety measurement

The performance specification has been written and verified in accordance with the international standard IEC 61207-1:1994 "Expression of performance of gas analyzers"

SERVOMEX

SIGNAL OUTPUTS/INPUTS	
Analog output	One configurable isolated 0/4-20mA per measurement (recommended impedance 600Ω or less, 1kΩ max) O_2 output configurable from 0-1% min. to 0-25% max. O_2 in 1% steps COe output configurable from 0-500ppm to 0-15,000ppm (measurement range remains as above)
Alarms & relays	Four SPCO relays (250V ac/3A or 28V dc/1A max), configurable for concentration alarms, faults, In calibration, In blowback, and solenoid valves control for blowback and autocalibration feature
Digital inputs	Two non-isolated digital inputs provided to remotely initiate autocalibration and perform blowback

PHYSICAL	CONTROL UNIT	SENSOR HEAD	FLOW ALARM RELAY BOX	PURGE CONTROLLER
Weight	<11kg (<24.3lbs)	<17kg (<37.5lbs)	<2.5kg (<5.5lbs)	7.5kg (16.5lbs)
Dimensions, WxDxH	391 x 167 x 260mm (15.4" x 6.6" x 10.3")	301 x 330 x 256mm (11.9" x 13.0" x 10.1")	120 x 120 x 80mm (4.7" x 4.7" x 3.1")	Depends on type, refer to Servomex Minipurge schematic detail
Mounting	Wall mount	Choice of mounting flanges and adaptors	Wall mount	Wall mount
Max altitude (installation)	2,000m (6,500 feet)			

OPERATING ENVIRONMENT				
Operation	-10°C to +55°C (+14°F to +131°F)	-20°C to +70°C (-4°F to +158°F)	-10°C to +50°C (-14°F to +122°F)	-20°C to +55°C (-4°F to +131°F)
Storage	-20°C to +55°C (-4°F to +131°F)	-30°C to +80°C (-22°F to +176°F)	-20°C to +70°C (-4°F to +158°F)	-20°C to +55°C (-4°F to +131°F)

UTILITIES	
Supply voltage	100-120V ac, 50/60 Hz or 220-240V ac, 50/60 Hz
Rated power	Control unit 250VA, sensor head 600VA Note: Control unit and sensor head are powered separately. Control unit power supply is fixed at time of order, but is field configurable. Sensor head supply voltage is factory set. Mains power cable connected to sensor head should have minimum conductor size of 1.5mm²
Sensor head aspirator supply	Gas: Instrument grade compressed air, free from oil and water (special aspiration available - consult Servomex) Pressure: 3.5psig typical (3 to 5psig - 0.2 to 0.3barg) Flow: <1.5 l/min typical. >10 l/min during blowback

CALIBRATION GAS REQUIREMENTS	CALIBRATION GAS COMPOSITION	OXYGEN SENSOR (Zr)	COMBUSTIBLES SENSOR (TFx)
Pressure 1barg (15psig) Flow: 600 ml/min typical	Air (20.95% O_2 in nitrogen) Air must be free from combustible gases (eg CO, H_2, hydrocarbons, etc)	Span (high)	Zero
	0.3% O_2 in nitrogen (recommended) Gas composition can be between 0.25% and 2.5% O_2 in nitrogen	Zero (low)	N/A
	1,000ppm carbon monoxide in air (recommended) Gas composition can be between 500ppm and 2,500ppm in air	N/A	Span

* Maximum loop resistance of 4Ω is required for zirconia cell heater connections with a minimum of 0.5mm² cross section

SERVOMEX

INTERCONNECTING CABLE REQUIREMENTS

		CROSS SECTION MIN	LENGTH MAX
Oxygen only	3 twisted pairs with overall screen*	1.0mm^2 1.5mm^2 2.5mm^2	100m 150m 300m
Combustibles	6 twisted pairs with individual and overall screens* cross section	0.5m	100m
Oxygen and combustibles	9 twisted pairs with individual and overall screens* Note: Add 1 extra twisted pair if the optional sensor head temperature readout is required to be displayed by the control unit	0.5m	100m
Flow Sensor	3 cores with overall screen	1.0mm^2	100m

SAMPLE WETTED MATERIALS

	Sensor head	Oxygen sensor	Combustibles sensor	Flowcube	Unfiltered sample probe (<700°C)	Filtered sample probe (<700°C)	Filtered high temperature sample probe (700°C-1,000°C)	Ceramic sample probe (<1,750°C)
Stainless steel 303	●							
Stainless steel 310		●				●		
Stainless steel 316	●	●	●	●	●	●	●	●
Gasket sealing material	●							
Zirconia		●	●	●				
Platinum		●	●					
Platinum/iridium alloy			●	●				
Alumina		●	●					
Ni/Fe/Cr alloy		●						
Corrosion-resistant glass			●					
Graphite gasket			●					
Silicon carbide						●	●	
Incoloy 803*							●	
High temperature sealing glass		●		●				
High temperature ceramic								●

* Or equivalent. Subject to change

SERVOMEX

COMPLIANCE

HAZARDOUS AREA APPROVALS	ATEX	IECEx	cCSAus
CONTROL UNIT	Ex II 3GD, Ex ic nA nC IIC T5 Gc (-10°C ≤ Ta ≤ +55°C) (Gases) Ex tc IIIB T75°C Dc IP65 (-10°C ≤ Ta ≤ +55°C) (Dusts)	IECEx ITS 12.0047X Ex ic nA nC IIC T5 Gc Ex tc IIIB T75°C Dc -10°C ≤ t_{amb} ≤ 55°C	Class I, Div 2, Groups A, B, C & D T5 (-10°C ≤ Ta ≤ +55°C) Class II, Div 2, Groups F & G T5 (-10°C ≤ Ta ≤ +55°C) Class III, Div 1 T5 (-10°C ≤ Ta ≤ +55°C) Ex nA nC IIC T5 Gc Class I, Zone 2, AEx nA nC IIC T5 Gc (-10°C ≤ Ta ≤ +55°C) Zone 22 AEx tc IIIB T75°C Dc IP65
SENSOR HEAD*	Ex II 3G, Ex pz IIC T3/T2 Gc (-20°C ≤ Ta ≤ +70°C) (Gases)	Ex pz IIC T3/T2 Gc (-20°C ≤ Ta ≤ +70°C) (Gases)	Class I, Div 2, Groups A, B, C & D T3/T2 (-20°C ≤ Ta ≤ +70°C) IP66
PURGE CONTROLLER	Ex II 2 (3) G D Ex (pzc) IIC T6 Gb Ex (pzc) IIIC T85°C Db T_{amb} -20°C +55°C	Ex (pzc) IIC T6 Gb Ex (pzc) IIIC T85°C Db T_{amb} -20°C +55°C	Class I, Div 2, Groups A, B, C & D Type Z pressurization Class 1, Zone 2, Group IIC, T6 (-20°C ≤ Ta ≤ +55°C)
FLOW ALARM RELAY BOX	Ex II 3GD, Ex nA nC IIC T4 Gc (-20°C ≤ Ta ≤ +65°C) (Gases) Ex tc IIIC T75°C Dc IP66 (-20°C ≤ Ta ≤ +65°C) (Dusts)	Ex nA nC IIC T4 Gc (-20°C ≤ Ta ≤ +65°C) (Gases) Ex tc IIIC T75°C Dc IP66 (-20°C ≤ Ta ≤ +65°C) (Dusts)	Class I, Div 2, Groups A, B, C & D T4 (-20°C ≤ Ta ≤ +65°C) Class II, Div 2, Groups F & G T4 (-20°C ≤ Ta ≤ +65°C) Class III, Div 1 T4 (-20°C ≤ Ta ≤ +65°C) Ex nA nC IIC T4 Gc Class I, Zone 2, AEx nA nC IIC T4 Gc (-20°C ≤ Ta ≤ +65°C) Zone 22, AEx tc IIIB T75°C Dc IP66

* The FluegasExact sensor head is not suitable for use in hazardous area / locations without the use of appropriate safety purge equipment.

EC DIRECTIVES	The FluegasExact 2700 complies with the EMC Directive, the Low Voltage Directive, RoHS II, and all other applicable directives.
ELECTRICAL SAFETY	Electrical safety to IEC 61010-1

OPTIONS

CONFIGURATION OPTIONS	DESCRIPTION
Controller and sensor head options	The analyzer consists of a sensor head and a control unit which includes a backlit liquid crystal display (2 lines x 16 characters) and an eight-button keypad. The sensor head is suitable for installation in non-hazardous and hazardous areas when used with suitable purge - ATEX Cat. 3, IECEx Zone 2. The control unit is suitable for installation in non-hazardous and hazardous areas - ATEX Cat. 3, IECEx Zone 2, cCSAus Cl 1, Div 2. Further hazardous area approvals are pending, for more information consult Servomex.
Measurement and supply voltage	The unit can be supplied as an oxygen-only measurement or an oxygen and combustibles measurement analyzer. The analyzer can also be supplied with specially coated PCBs with enhanced environmental protection, for use in very humid environments. 110 and 220V AC available.
Combustible sensors	For natural gas and light oil applications with flue/sample with SOx contents <500ppm, our high sensitivity combustibles sensor is recommended. For sour gas, heavy oils, coal and incinerators with flue/sample with SOx content <2,500ppm our sulfur-resistant combustible sensor is recommended.
Flowcube internal flow sensor	Our Flowcube technology offers an internal solid state flow sensor fitted directly to the inlet of the measurement transducers, ensuring that the measurement gas is flowing through the transducer at all times for maximum reliability and safety. The remote relay box offers one flow status relay contact and one flow sensor system fault relay contact, for maximum diagnostic coverage. Suitable for installation in non-hazardous and hazardous areas - ATEX Cat. 3, IECEx Zone 2, cCSAus Cl 1, Div 2.
Sample probes	A range of sample probes are available for use in different sampling environments. For samples with a relatively low dust loading (<0.2 g/m^3) open-ended probes are available in stainless steel, high temperature alloy, and ceramic materials suitable for a range of temperatures up to 1,750°C (3,182°F). Filtered probes are also available for samples with higher dust loading (up to 20 g/m^3) and temperatures below 1,500°C (2,732F). The stainless steel filtered probe can also be supplied with additional mechanical support and shroud. (Note: for higher dust loadings and temperatures, and for special probes, refer to Servomex).
Internal filter and flame traps	Internal filter and flame traps: The analyzer is supplied fitted with flame arrestors and an internal filter as standard. (Note: the analyzer is not suitable for use with flammable samples).
Electrical threaded entries	Choose from 3⁄4" NPT, M20, M25, PG13.5 or PG21 entries. Select entry size to suit cables and glands used.
Sensor head enclosure	The analyzer sensor head is fitted with a breather fitting to prevent pressurization of the enclosure. These can be replaced with fittings for the addition of a corrosive or pz purge for the sensor head and terminal box, if required.
Sensor head mounting option	There are six sensor head mounting options: A standard mounting option, a probe retention option which allows the sensor head to be removed whilst the sample probe is retained within the flue, a thermal spacer which separates the sensor head from the flue wall with a high surface temperature (350°C to 500°C), a stand-off flange which increases the separation between the sensor head and the heat radiation from the flue wall (350°C to 500°C), a combined thermal spacer and probe retention and a combined probe retention and stand-off flange.
Adaptor flange option	The sensor head is supplied with an equivalent PCD 4" ANSI 150lbs flange as standard. Adaptors are available to suit other flange sizes. The analyzer is not designed to withstand 150lbs pressure. The flue pressure should be a maximum of 5psig.
Control unit enclosure option	The analyzer can be fitted with blanking plugs, a breather port or fittings to allow the use of a corrosive purge system.
Utilities	A utilities unit can be configured with one or more of the following: Aspirator air set - provides filtration and pressure regulation of the compressed air for the aspirator in the analyzer. Autocalibration - provides the necessary components to allow automatic calibration of the analyzer with calibration gases (not supplied). Manual calibration - provides the necessary components to allow manual calibration of the analyzer with calibration gases (not supplied). Blowback - provides the necessary components to allow the blowback of the sample probe and internal filter. When nitrogen aspiration is used the calibration versions of the utilities units cannot be used.

SERVOMEX

CONFIGURATION OPTIONS		
Controller options	Safe Area	☐
	Hazardous Area ATEX Cat 3	☐
	Hazardous Area IECEx Zone 2	☐
	Hazardous Area cCSAus Cl 1, Div 2	☐
Sensor head options	Safe Area	☐
	Hazardous Area ATEX Cat 3	☐
	Hazardous Area IECEx Zone 2	☐
	Hazardous Area cCSAus Cl 1, Div 2	☐
Sensor head purge option	Not required or supplied by others	☐
	Servomex MiniPurge ATEX Cat. 3/IECEX Zone 2	☐
	Servomex MiniPurge cCSAus Cl 1, Div 2	☐
Measurement	O_2 ☐ Oxygen and combustibles ☐	
Combustible sensors	High sensitivity ☐ Sulfur resistant ☐	
Flow alarm	Not required	☐
	Safe area	☐
	Hazardous Area ATEX Cat 3	☐
	Hazardous Area IECEx Zone 2	☐
	Hazardous Area cCSAus Cl 1, Div 2	☐
Aspirator supply	Air ☐ N_2 ☐	
Supply voltage	110-120V ☐ 220-240V ☐	
Enhanced environmental protection	☐	

Standard sample probes		0.5	1.0	1.5	2.0	2.5	3.0	Length (m)
SS sample probe, unsupported, open ended <700°C/1,292°F	☐	✓	✓	✓	*	■	■	
SS sample probe, unsupported, filtered <700°C/1,292°F	☐	✓	✓	✓	*	■	■	
SS sample probe, supported, filtered with shroud <700°C/1,292°F	☐	✓	✓	✓	✓	✓	✓	
SS sample probe, supported, dual filtered, with shroud <700°C/1292°F	☐	✓	✓	✓	✓	✓	✓	
High temperature alloy, unsupported, open ended, <1,000°C/1,832°F	☐	✓	✓	*	*	■	■	
High temperature alloy, unsupported, filtered, <1,000°C/1,832°F	☐	✓	✓	*	*	■	■	
Ceramic, sample probe, open ended, <1,750°C/3,182°F	☐	✓	✓	✓	■	■	■	
Ceramic, sample probe, unsupported, filtered, <1,500°C/2,732°F	☐	✓	✓	■	■	■	■	
Hastelloy, sample probe, unsupported, open <500°C/932°F	☐	✓	✓	✓	■	■	■	
Non standard probes *	☐							

* For lengths, materials (including Hexoloy), and temperatures consult Servomex

Electrical threaded entries	3⁄4" NPT (standard)	☐
	M20	☐
	M25	☐
	PG13.5	☐
	PG21	☐
Sensor head enclosure	Breather fittings	☐
	Corrosive purge fittings	☐
	Hazardous area purge entries	☐
Sensor head mounting option	Standard (4" ANSI 150lbs)	☐
	Probe retention (excluding supported probes)	☐
	Thermal spacer (excluding supported probes)	☐
	Probe retention & thermal spacer (excluding supported probes)	☐
	High temperature stand-off (excluding supported probes)	☐
	High temperature stand-off & probe retention (excluding supported probes)	☐
Adaptor flange option	None (4" ANSI 150lbs)	☐
	3" ANSI 150lbs equivalent	☐
	DIN 65 equivalent	☐
	DIN 80 equivalent	☐
	JIS 65 equivalent	☐
	JIS 80 equivalent	☐
	Weld-on flange complete with studs (4" ANSI 150lbs equivalent)	☐
	Model 700B/N to 2700 adaptor flange (excluding high temperature stand off)	☐
	Thermox to 2700 adaptor flange (excluding supported probes)	☐

■ Option not available

SERVOMEX

CONFIGURATION	
Control unit enclosure option	Blanking plugs only ☐ Breather port ☐ Corrosive purge fittings ☐
Utilities panel	None ☐ Air set (oxygen only) ☐ Autocal air set single ☐ dual ☐ Autocal and blowback single ☐ dual ☐ Manual cal, single/dual ☐
User manual	The FluegasExact Analyzer is supplied with a Quickstart™ and installation manual. English ☐
Service manual	A service manual containing technical descriptions, fault diagnosis information, parts removal, refitting and test instructions, tool and test equipment lists, and electrical drawings is available. It is intended for use by Servomex trained service personnel. Not required ☐ English ☐
Default software interface language	The analyzer is supplied with English, French and German software installed. The active language is user selectable. The default software interface language will be active when the analyzer is shipped. English ☐ French ☐ German ☐

N.B Not all options are compatible with each other.

DIMENSIONAL DRAWINGS

SENSOR HEAD

Typical analyzer mounting orientation with 4" ANSI flange. Other flanges are available

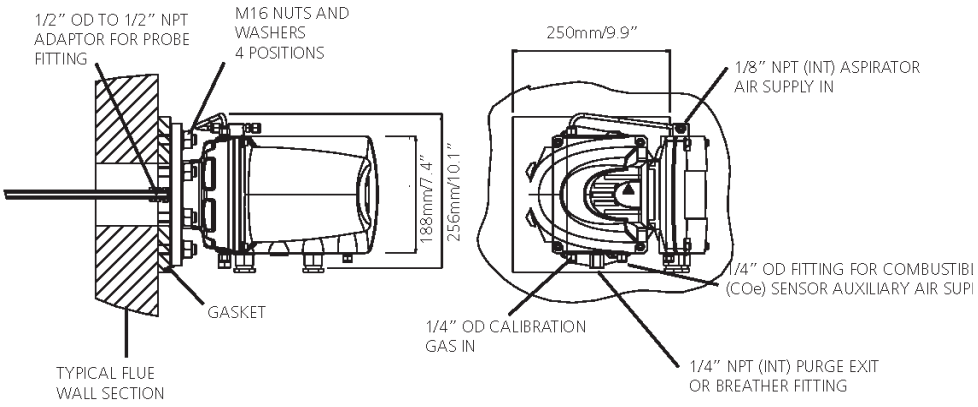

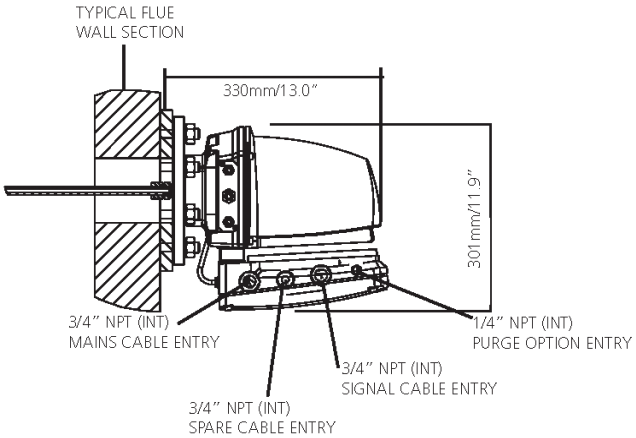

CONTROL UNIT

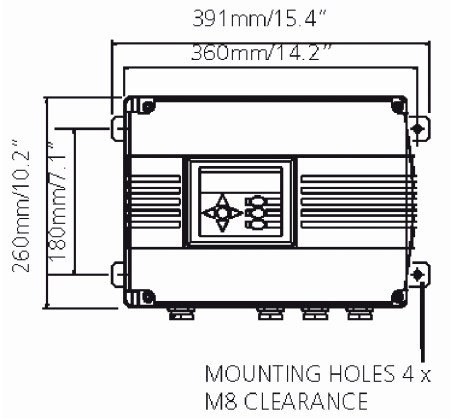

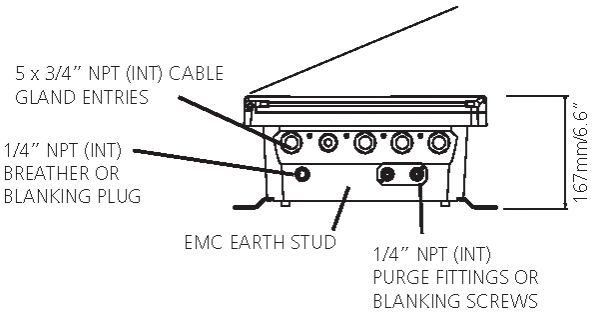

SERVICE ACCESS REQUIRED FOR DOOR TO BE OPENED:
365mm/14.4" IN FRONT
250mm/9.9" TO LEFT HAND SIDE

SERVOMEX MINI PURGE

ATEX & IECEx version

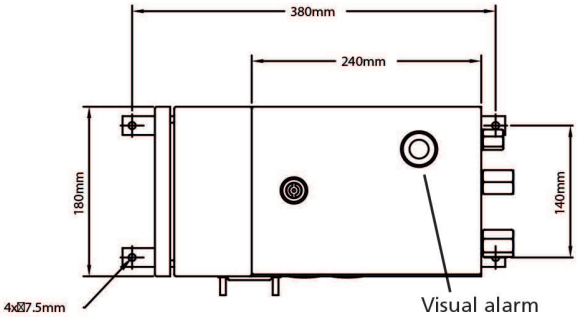

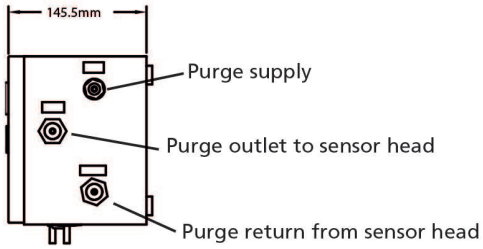

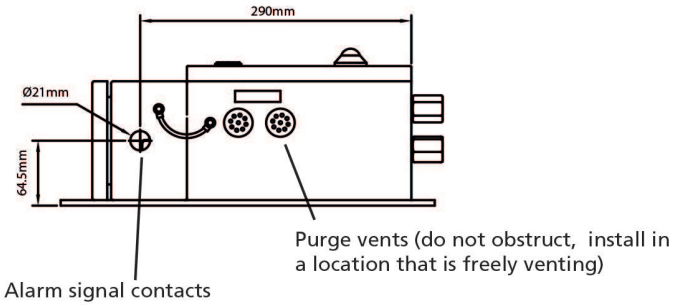

For installation details and certification information consult Servomex

North American version

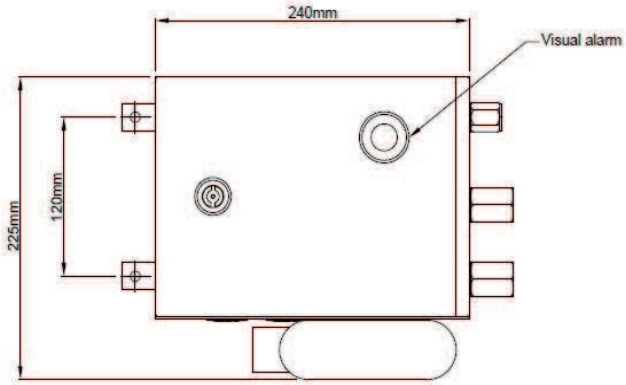

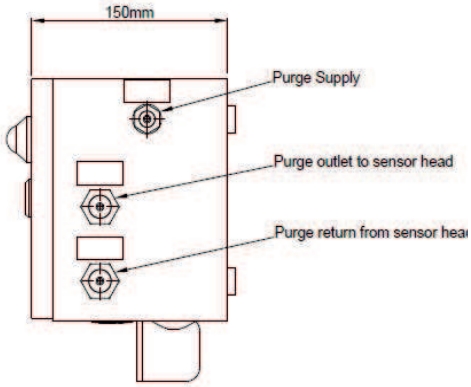

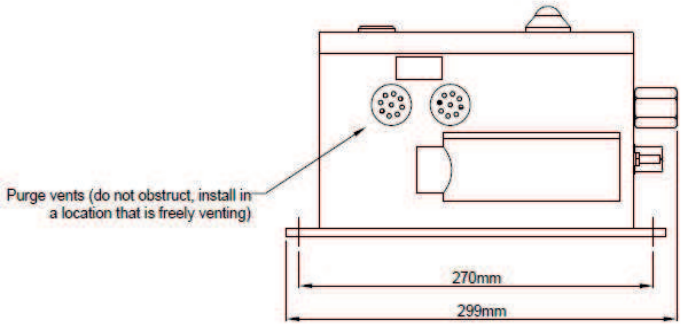

For installation details and certification information consult Servomex

FLOW ALARM RELAY BOX

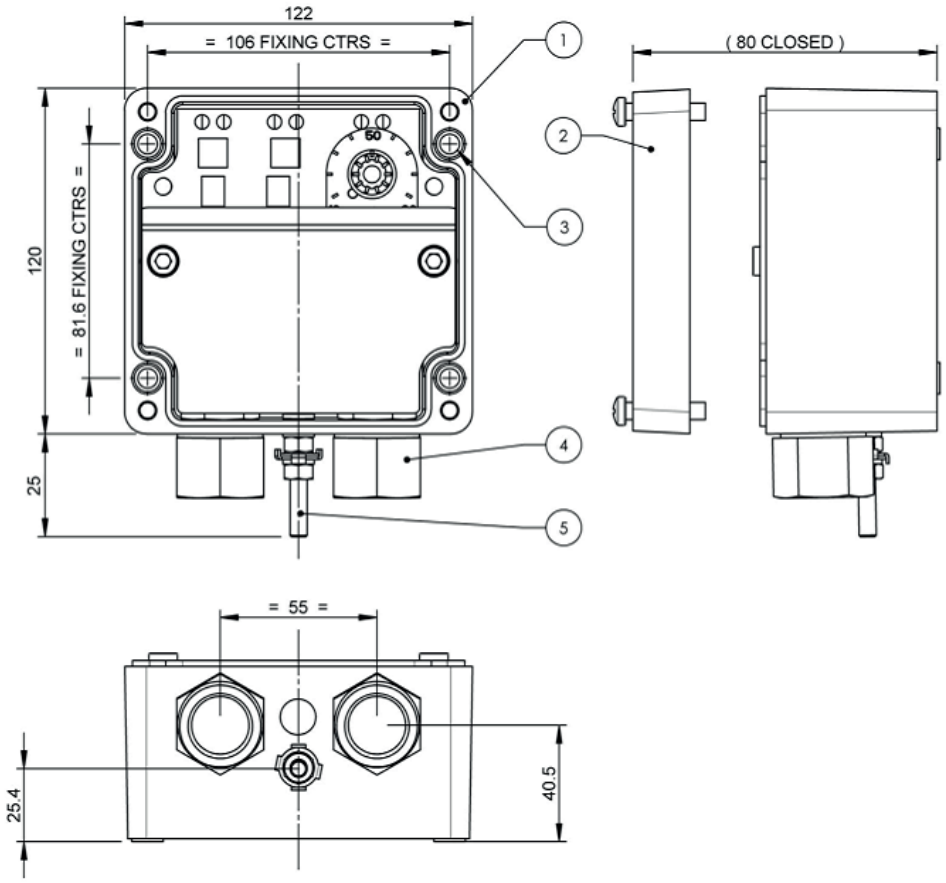

SERVOMEX

UTILITIES PANEL

MANUAL UTILITIES PANEL	
Specification temperature	Operating: -10°C to +50°C (+14°F to +122°F) Storage: -20°C to +55°C (-4°F to +131°F)
Compressed air & blowback air requirements	Pressure: 1 to 5barg (15 to 72.5psig) Flow: 4.5 to 10 l/min Instrument grade compressed air*, free of oil, water & dirt
Utilities units	02730731 Aspirator air set and manual calibration, single or dual sensors W 390mm x D 174mm x H 265mm (W 15.5" x D 6.8" x H 10.4"), <4.5kgs (<10lbs) 02730701 Aspirator air set, single or dual sensor W 93mm x D 99mm x H 165mm (W 3.7" x D 3.9" x H 6.5"), <400gms (<1.0lbs)

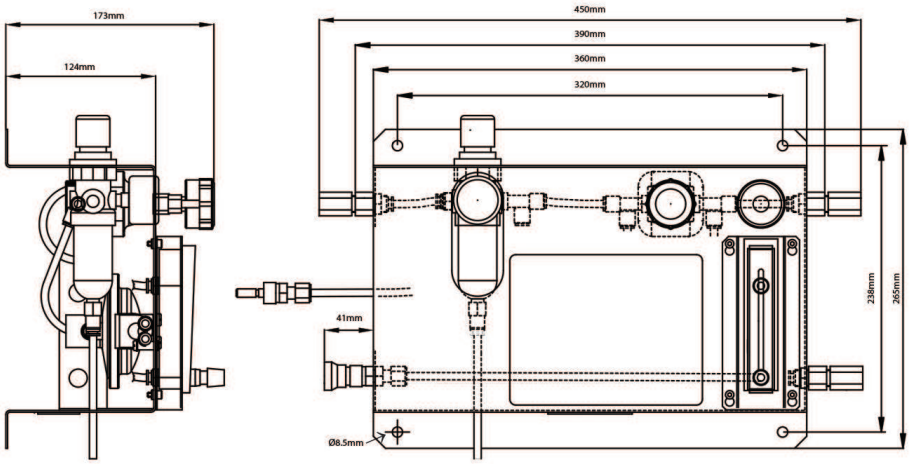

AUTOCALIBRATION/BLOWBACK UTILITIES PANEL	
Aspirator air set and automatic calibration units **	02730711 (single sensor), 02730721 (single sensor, with blowback), 02730713C (dual sensor), 02730723C (dual sensor, with blowback) W 400mm x D 220mm x H 500mm (W 16" x D 9" x H 20") <16kgs (<35lbs)
Ingress protection	IP65/NEMA 12 (Auto cal. units only)
Power supply	100V ac, 50/60Hz <20VA; 110-120V AC 50/60Hz <20VA or 220-240V AC 50/60Hz <20VA (field configurable)

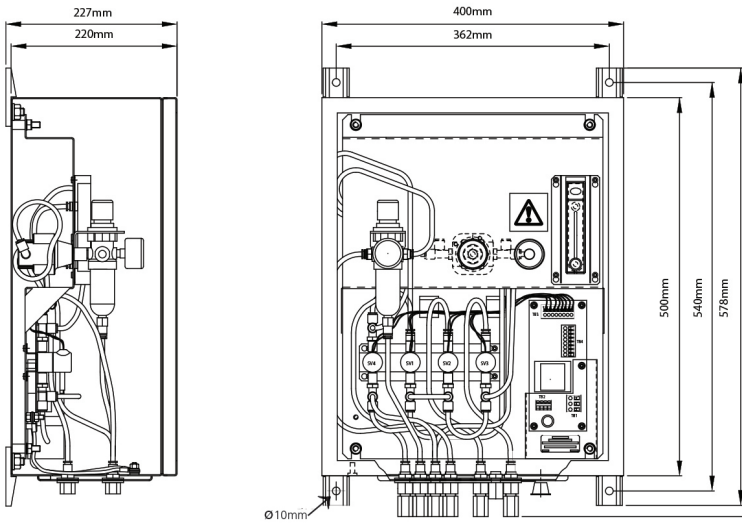

The nickel-plated brass bulkhead connections are suitable for 1/4" NPT and BSP male fittings & tubing. Internal components are brass, plastic fittings and tubing.

* Or nitrogen, if analyzer equipped for nitrogen aspiration (single measurement oxygen units only)
** The autocalibration versions of the utility units comply with the "CE Marking Directive"

WE'RE READY TO HELP

WHATEVER YOUR GAS ANALYSIS REQUIREMENTS, WHEREVER YOU ARE

PBTDSFluegasExact Rev.0 Date: 08/20

These analyzers are not intended for any form of use on humans and are not medical devices as described in the Medical Devices Directive 93/42EEC.

Please note: *Whilst every effort has been made to ensure accuracy, no responsibility can be accepted for errors and omissions.*
Data may change, as well as legislation, and you are strongly advised to obtain copies of the most recently issued regulations, standards and guidelines.
This document is not intended to form the basis of a contract.

Servomex has a policy of constant product improvement and reserves the right to change specifications without notice. © Servomex Group Limited. 2020.
A Spectris company. All rights reserved.

SERVOMEX
a spectris company

SERVOMEX.COM